MC002R040SL

MOSFETs Silicon 40V N-Channel MOS

Applications

- Synchronus Rectification
- Industrial and Motor Drive
- DC/DC and AC/DC Converters
- Power Tools

Product Summary

V_{DS}	40	V
I_D	156	A
$R_{DS(ON)}$,Typ@10V	1.7	mΩ
$R_{DS(ON)}$,Typ@4.5V	2.3	mΩ
Q_g	54	nC

Features

- High-Speed Switching
- Low $R_{DS(ON)}$
- Enhanced Body diode dv/dt capability
- Enhanced Avalanche Ruggedness
- 100% UIS and RG Tested

TO-220

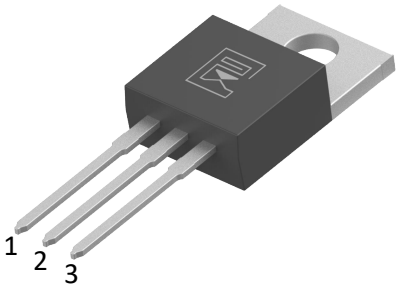

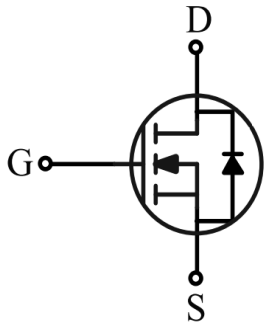

Gate： 1

Drain： 2

Source： 3

Package Marking and Ordering Information

Ordering code	Marking	Package	Packaging	Min. package quantity
MC002R040SL	MC002R040SL	TO-220	Tube	1000

Absolute Maximum Ratings（Tc=25℃ unless otherwise noted)

Parameter			Symbol	Ratings	Unit
Drain-Source Voltage			V_{DS}	40	V
Gate-Source Voltage			V_{GS}	±20	V
Continuous Drain Current	Tc=25℃	(Note 1)	I_D	156	A
Continuous Drain Current	Tc=100℃	(Note 1)		100	A
Drain Current-Pulsed		(Note 1)	I_{DM}	600	A
Total Dissipation			P_D	73	W
Junction Temperature			T_j	150	℃
Storage Temperature			T_{stg}	-55-150	℃
Single Pulse Avalanche Energy		(Note 2)	E_{AS}	500	mJ

Note: Using continuously under heavy loads (e.g. the application of high temperature/current/voltage and the significant change in temperature, etc.) may cause this product to decrease in the reliability significantly even if the operating conditions (i.e. operating temperature/current/voltage, etc.) are within the absolute maximum ratings.

Thermal Characteristics

Parameter	Symbol	Max	Unit
Maximum Junction-to-Case	$R_{\theta JC}$	1.7	℃/W
Maximum Junction-to-Ambient	$R_{\theta JA}$	60	℃/W

Note 1：Ensure that the channel temperature does not exceed 150℃.

Note 2：V_{DD}=40V, Tch= 25℃(initial), L=0.5mH, Rg=25Ω.

Note：This transistor is sensitive to electrostatic discharge and should be handled with care.

Electrical Characteristics（Tc=25℃ unless otherwise noted)

Parameter	Symbol	Test Condition		Min	Typ	Max	Unit
Static Parameters							
Drain-Source Breakdown Voltage	BV_{DSS}	V_{GS}=0V,I_D=250uA		40	-	-	V
Drain-Source Leakage Current	I_{DSS}	V_{DS}=40V,VGS=0V		-	-	1	uA
Gate-Body Leakage Current	I_{GSS}	V_{GS}=±20V,V_{DS}=0V		-	-	±100	nA
Gate Threshold Voltage	$V_{GS(TH)}$	V_{GS}=V_{DS},I_D=250uA		1.0	1.8	3.0	V
Drain-Source On Resistance	$R_{DS(ON)}$	V_{GS}=4.5V,I_D=15A		-	2.3	2.7	mΩ
			Tj=125℃	-	3.3	-	
		V_{GS}=10V,I_D=20A		-	1.7	2.0	mΩ
			Tj=125℃	-	2.4	-	
Dynamic Characteristics							
Input Capacitance	C_{iss}	V_{DS}=15V,V_{GS}=0V, f=1.0MHz		-	3348	-	pF
Output Capacitance	C_{oss}			-	2063	-	pF
Reverse Transfer Capacitance	C_{rss}			-	80	-	pF
Gate Resistance	R_g	V_{DS}=0V,V_{GS}=0V, f=1.0MHz		-	2.1	-	Ω
Switching Paramters							
Turn-On Delay Time	$t_{d(on)}$	V_{DS}=20V,I_D=20A, V_{GS}=10V,R_G=10Ω		-	28	-	ns
Turn-On Rise Time	t_r			-	15	-	ns
Turn-Off Delay Time	$t_{d(off)}$			-	75	-	ns
Turn-Off Rise Time	t_f			-	18	-	ns
Total Gate Charge	Q_g	V_{DS}=32V,I_D=20A, V_{GS}=10V		-	54	-	nC
Gate-Source Charge	Q_{gs}			-	10	-	nC
Gate-Drain Charge	Q_{gd}			-	11	-	nC
Source-Drain Characteristics							
Diode Forward Voltage	V_{sd}	V_{GS}=0V,I_S=10A		-	0.8	1.2	V
Reverse Recovery Time	t_{rr}	V_R=40V,I_F=20A, di/dt=100A/us		-	112	-	ns
Reverse Recovery Charge	Q_{rr}			-	190	-	nC

Characteristics Curves

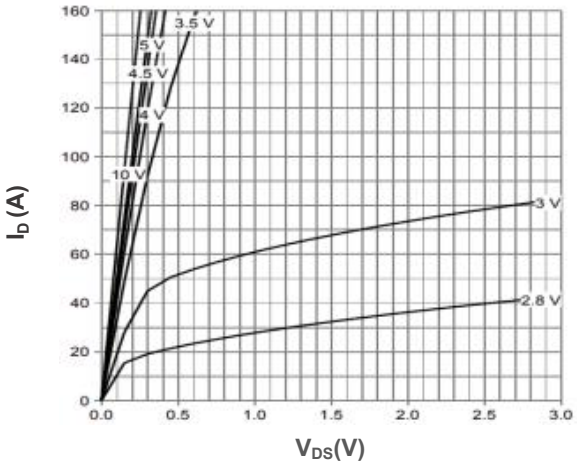

Output Characteritsics

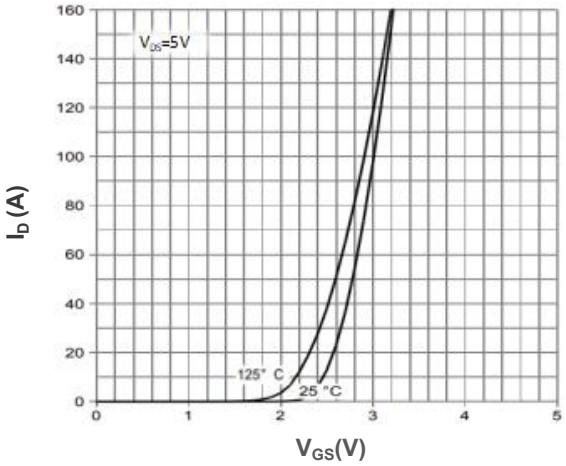

Transfer Characteritsics

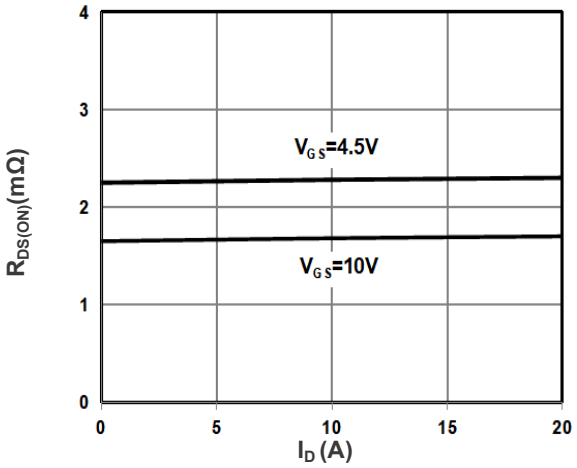

On Resistance Vs Drain Current

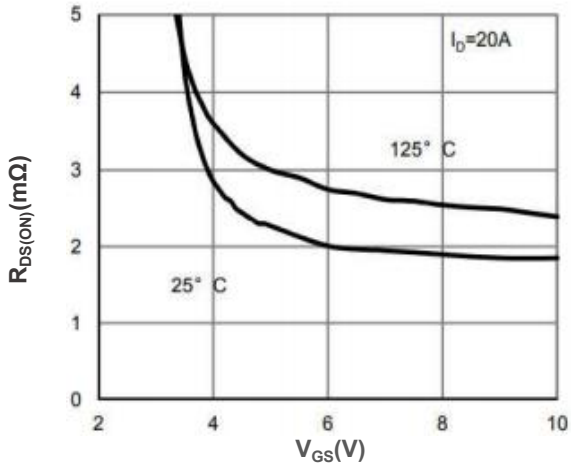

On Resistance Vs Gate Source Voltage

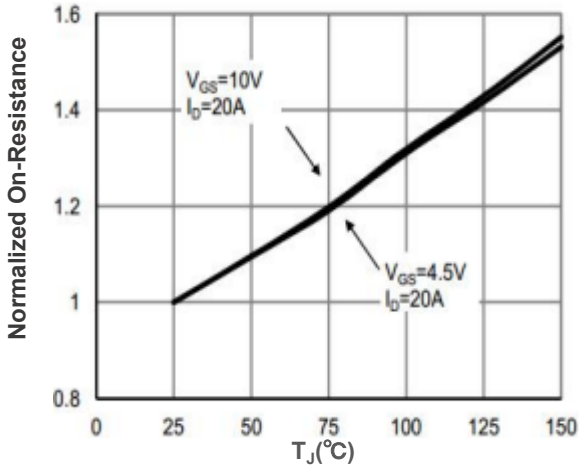

Rdson-JunctionTemperature

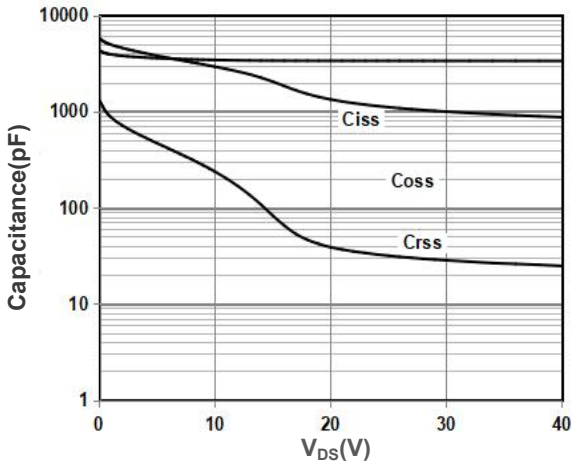

Capacitance

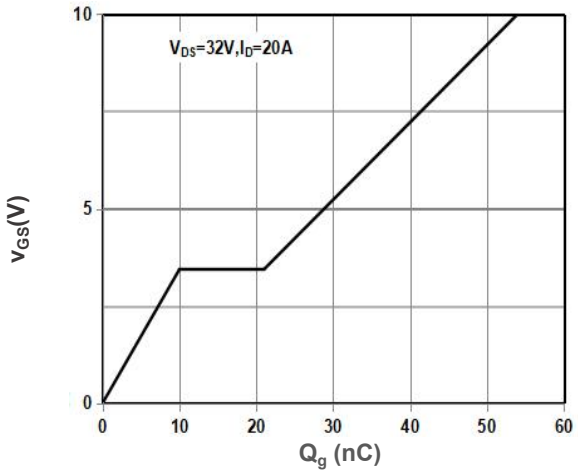

Gate Charge Waveform

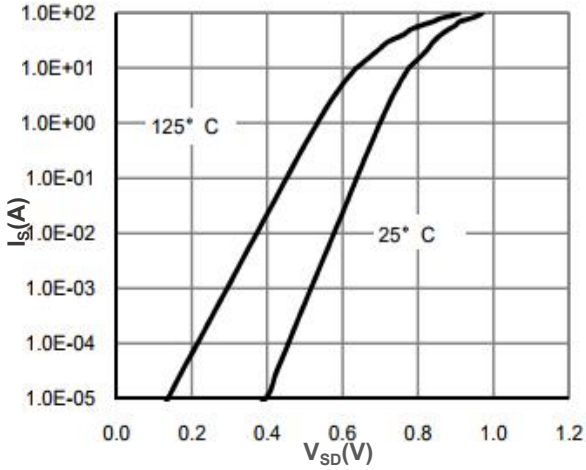

Source-Drain Diode Forward Voltage

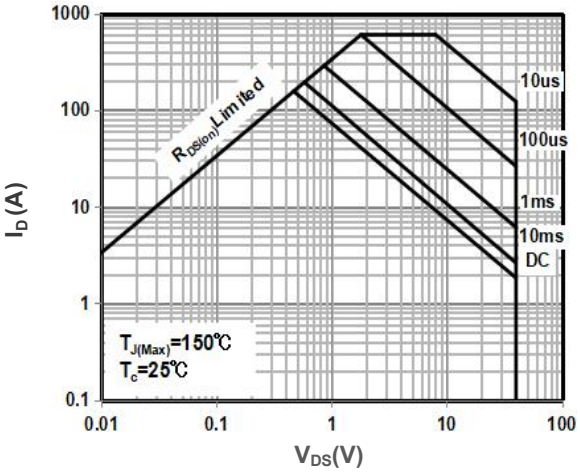

Maximum Safe Operating Area

Note： The above characteristics curves are presented for reference only and not guaranteed by production test, unless otherwise noted.

Test Circuit & Waveform

Gate Charge Test Circuit & Waveform

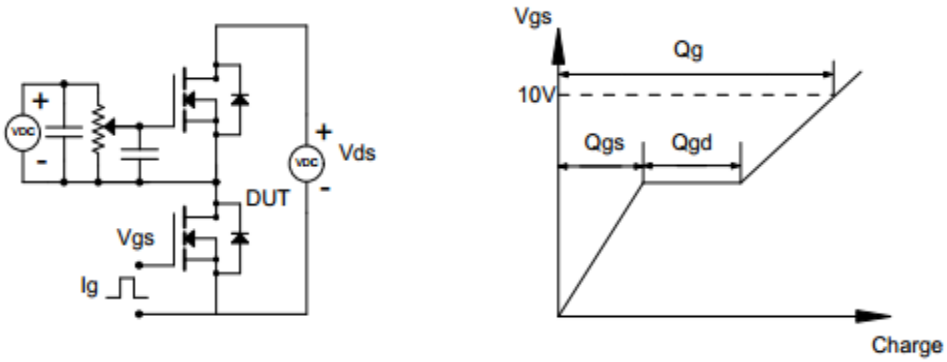

Resistive Switching Test Circuit & Waveform

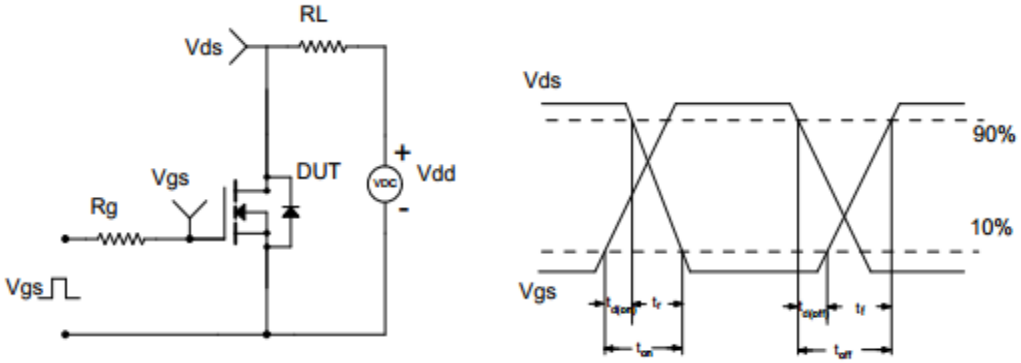

Unclamped Inductive Switching (UIS) Test Circuit & Waveform

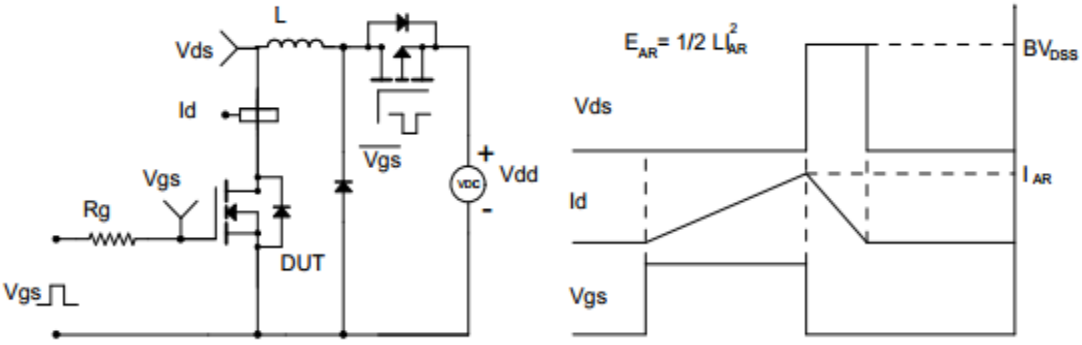

TO-220 Package Dimensions

Unit：mm
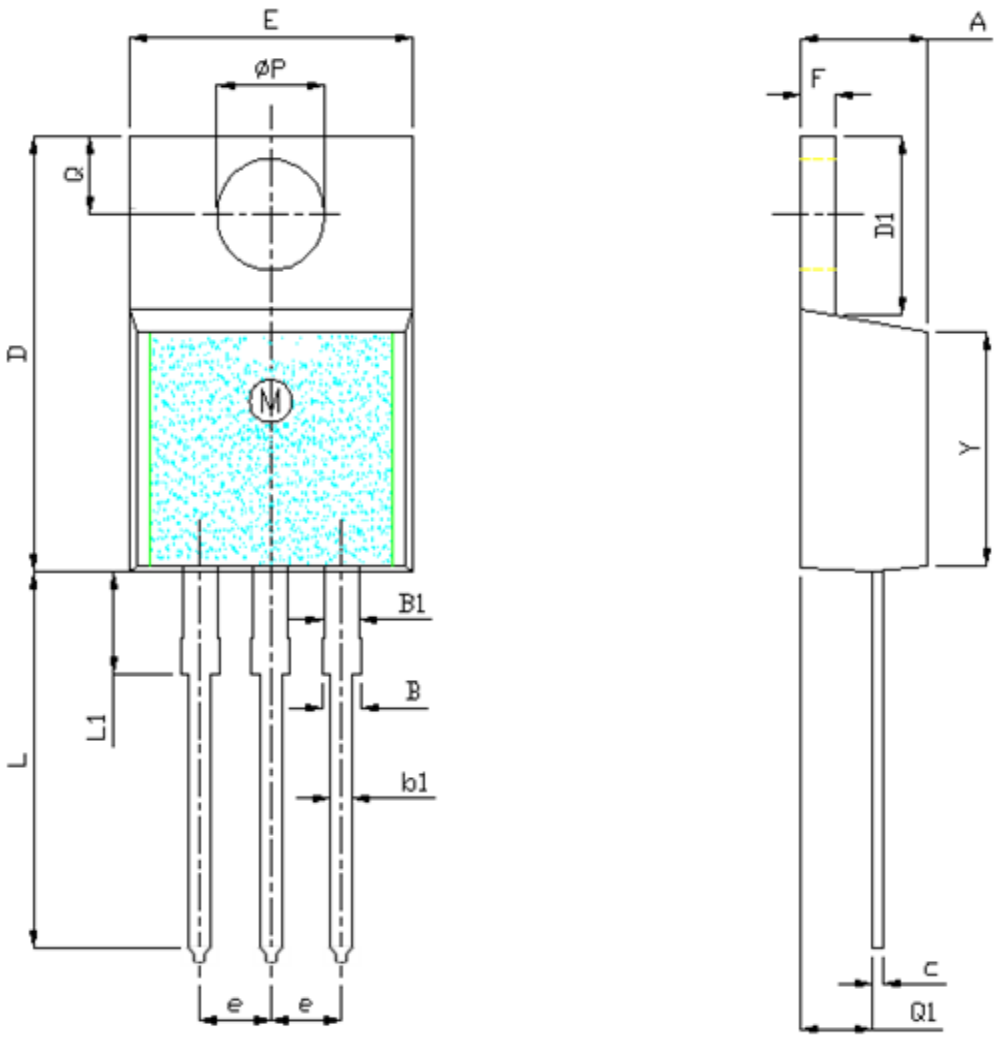
Symbol	Min	Nom	Max	Symbol	Min	Nom	Max
A	4.00		4.80	e	2.44	2.54	2.64
B	1.20		1.40	F	1.10		1.40
B1	1.00		1.40	L	12.50		14.50
b1	0.75		0.95	L1	3.00	3.50	4.00
c	0.40		0.55	ΦP	3.70	3.80	3.90
D	15.00		16.50	Q	2.50		3.00
D1	5.90		6.90	Q1	2.00		2.90
E	9.90		10.70	Y	8.02	8.12	8.22